General Description

The TM1009 is a low cost, low noise amplifier IC, designed for GPS, DVB, PHS and DECT application in L Band. The device is packaged in a compact 2mm by 2mm leadless package.

This device is designed for DC-3GHz application. The device is a two stages low noise amplifier with current limiter, and has very low current consumption. So the low noise figure of device can improve the sensitivity of the system, and very low current consumption can maximize the battery life in portable equipment.

Features

- Single supply voltage of +3.3V nominal.
- 28.5dB gain at 1.57542GHz with low noise 1.4 dB.
- 10.5 mA at supply voltage is +5.5V.
- QFN 2mm x 2mm ultra small leadless package.
- Green Package
- MSL 1

Function Block Diagram

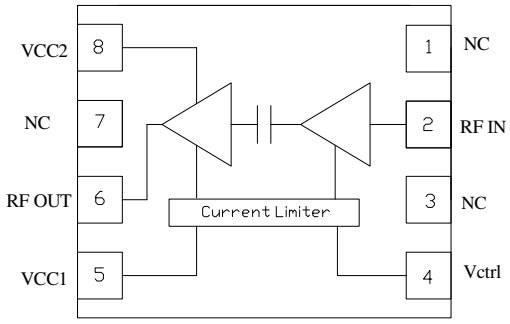

Applications

- GPS
- DVB
- PHS
- DECT

Specification Summary

Parameter	Min.	Typical	Max.	Unit	Condition
Operating Frequency Range		1.57542		GHz	
Gain	27	28.5		dB	RFin=-40dBm,Vcc1=Vcc2=Vctrl=3.3V
Noise		1.4	1.6	dB	RFin=-40dBm,Vcc1=Vcc2=Vctrl=3.3V
S_{11}		-8.5	-7.5	dB	RFin=-40dBm,Vcc1=Vcc2=Vctrl=3.3V
S_{22}		-9	-8	dB	RFin=-40dBm,Vcc1=Vcc2=Vctrl=3.3V
Bias Current		8.5	10	mA	RFin=-40dBm,Vcc1=Vcc2=Vctrl=3.3V
Power Supply Voltage	2.5		5.5	V	

TEL: +886-3-552-5889, FAX: +886-3-552-5822, http://www.taiwanmicro.com.tw E-mail: sales@taiwanmicro.com.tw
Rev V0.2 2006/3/26

Performance data

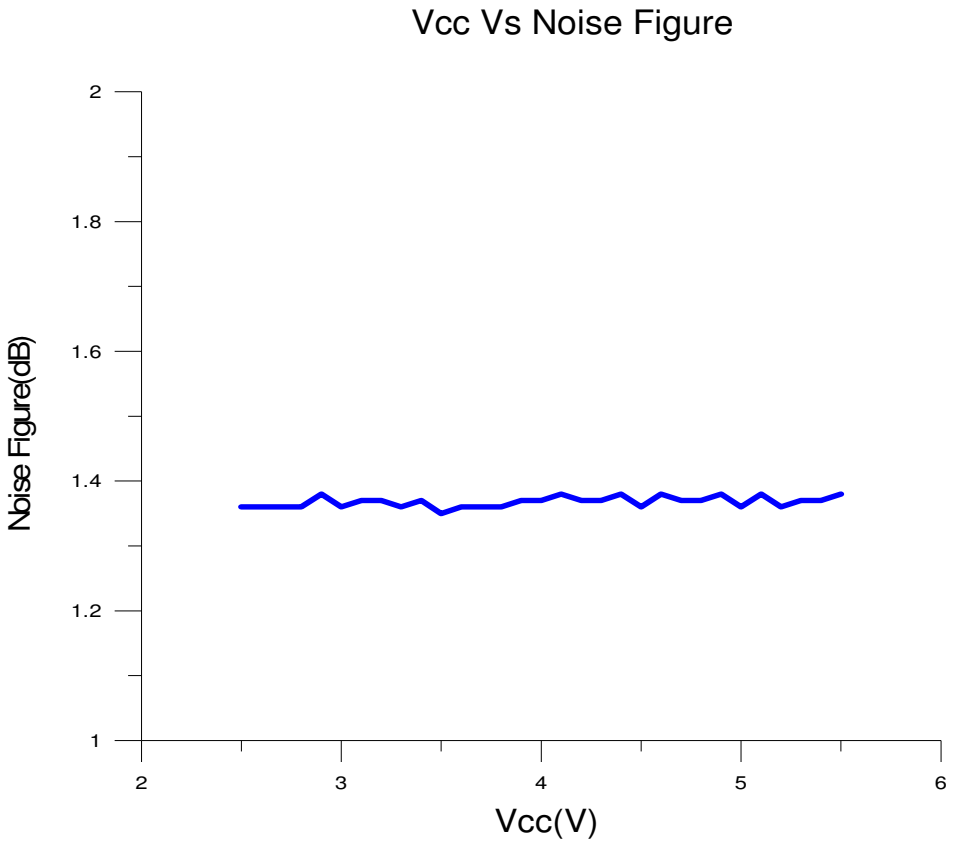

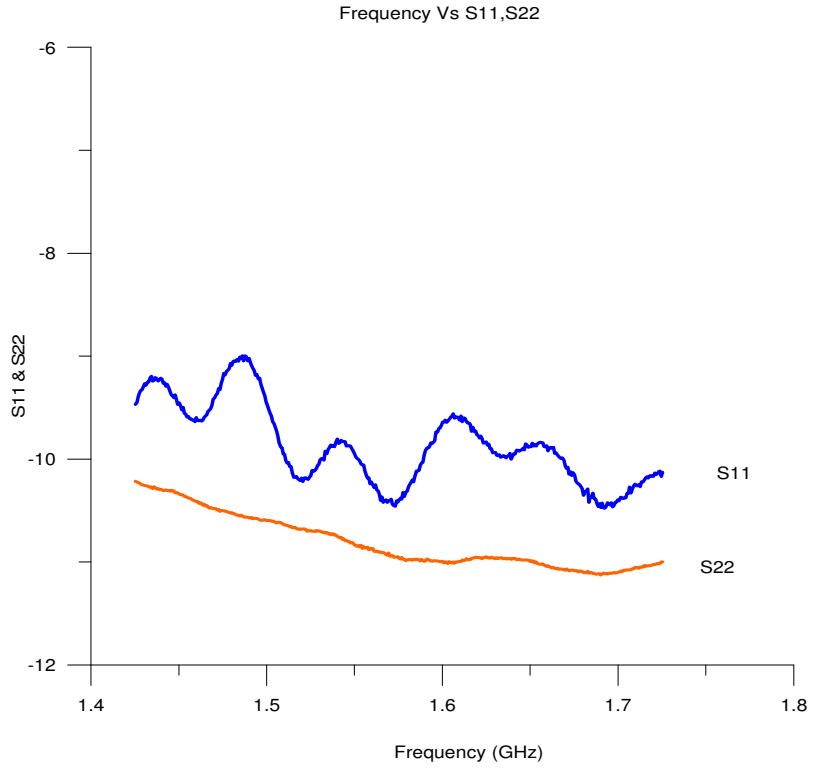

TEL: +886-3-552-5889, FAX: +886-3-552-5822, http://www.taiwanmicro.com.tw E-mail: sales@taiwanmicro.com.tw

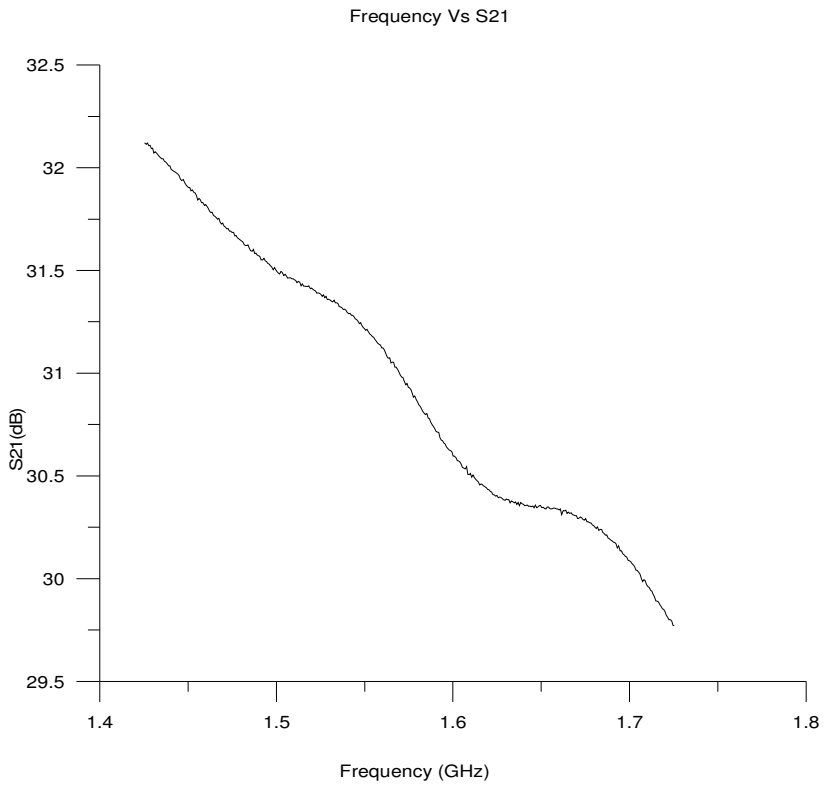

System Application Block Diagram

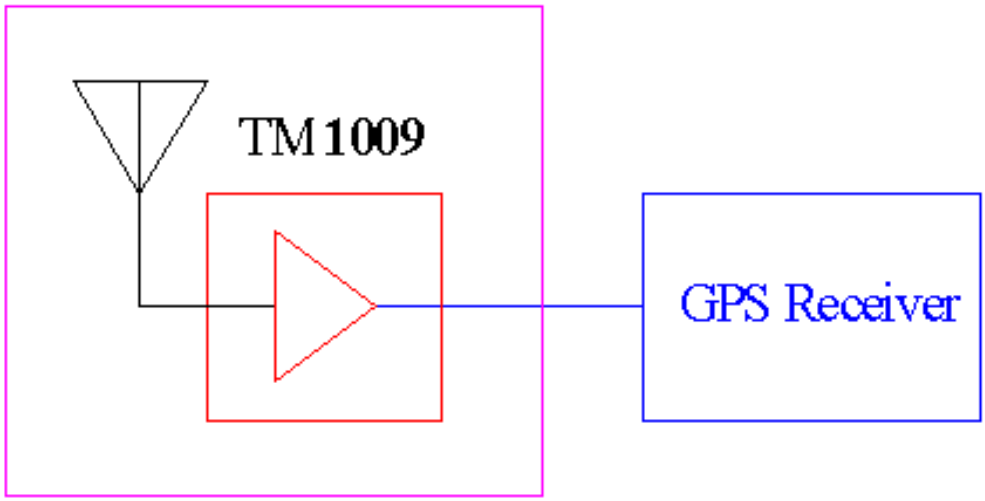

TEL: +886-3-552-5889, FAX: +886-3-552-5822, http://www.taiwanmicro.com.tw E-mail: sales@taiwanmicro.com.tw